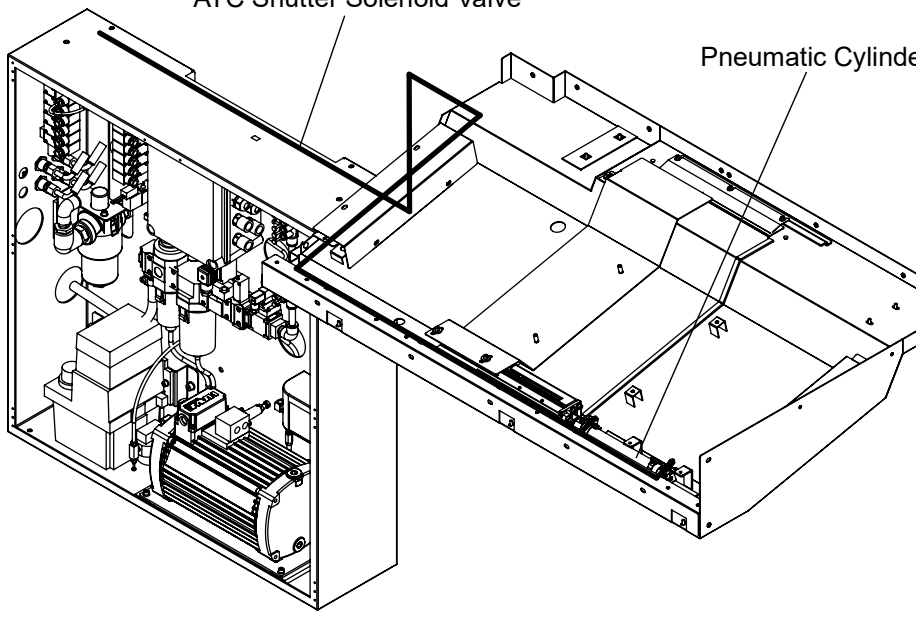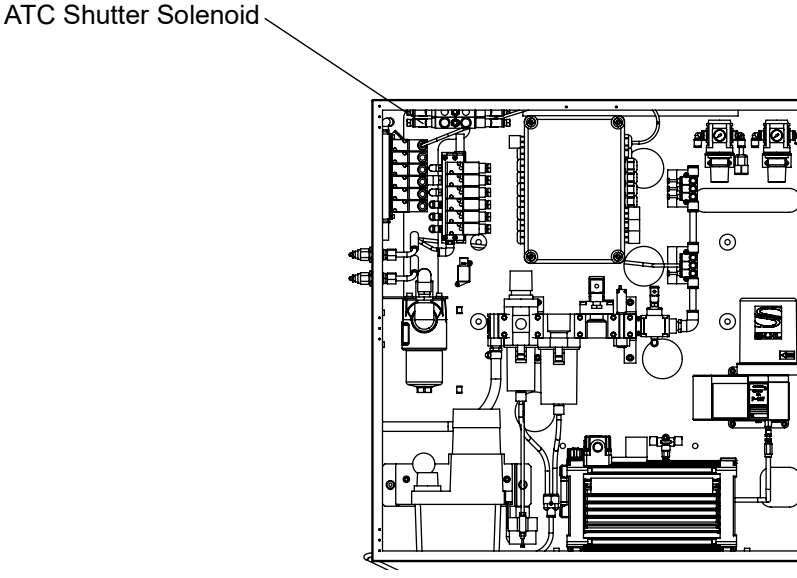Piping Route